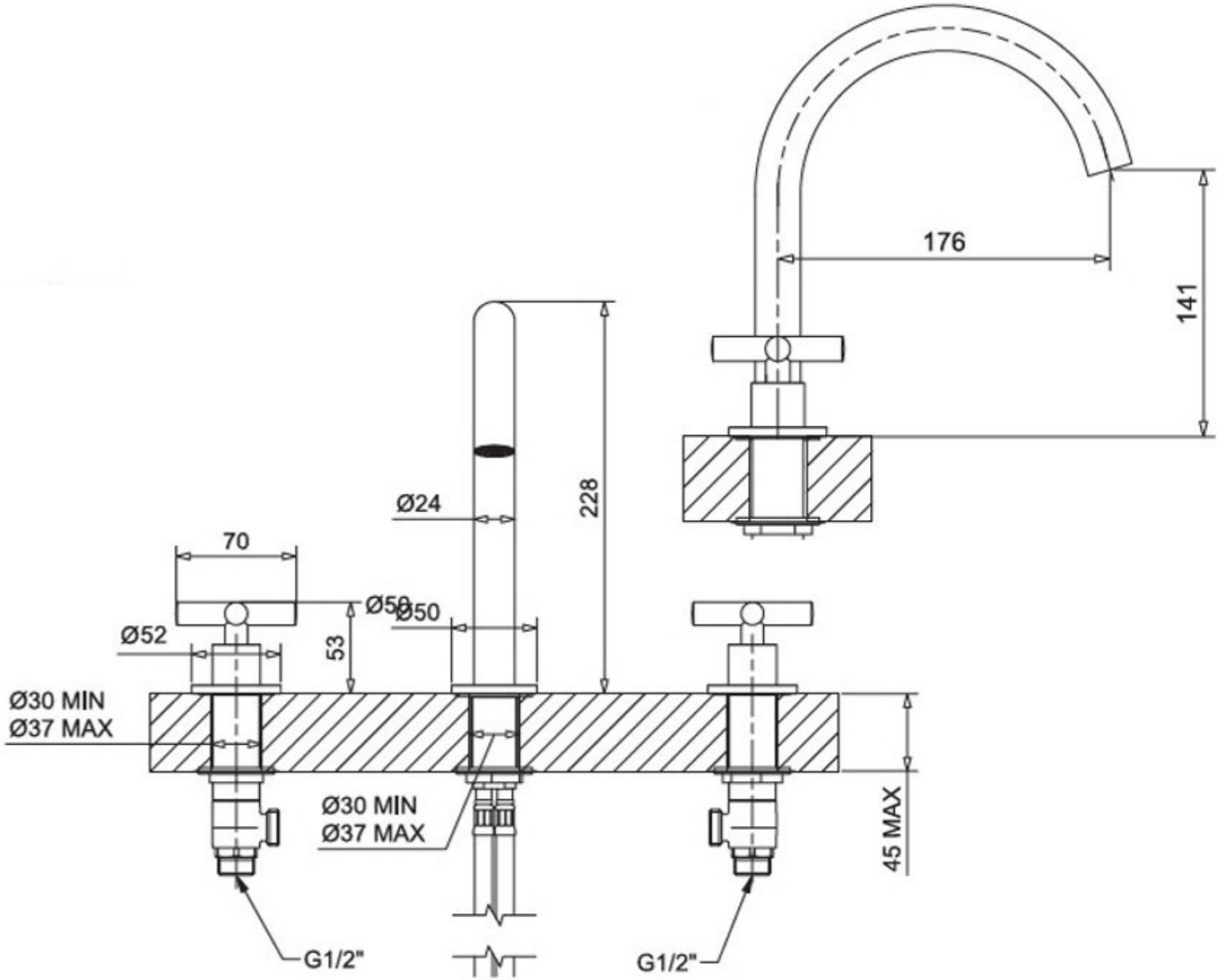
176
141
228
Ø24
70
Ø50
Ø50
Ø52
53
Ø30 MIN
Ø37 MAX
Ø30 MIN
Ø37 MAX
45 MAX
G1/2"
G1/2"